OWNER'S TECHNICAL MANUAL

Diesel Driven 3"
Diesel & Water Transfer Engine Pump Key Start

DK80

Description

The Alemlube DK80 diesel driven 3" transfer engine pump is specifically designed and manufactured for the transfer of diesel and water. Mounted in a robust tubular steel roll frame with rubber feet the DK80 is completely portable, suits many industrial, workshop,agricultural, municipal, marine services and on site applications including construction site dewatering and is capable of transferring up to 900 litres of diesel fuel or water per minute.

Driven by a powerful diesel engine this lightweight die-cast aluminium pump with 3" diameter inlet & outlet ports operates efficiently with a maximum suction head of 7 metres and a maximum lift head of 26 metres.

Always ready to perform tank filling, diesel or water transfer the DK80 has a 3.5L fuel tank capacity with a key start starting system.

Specifications

Uses	Diesel and water transfer
Engine Type	OHV 4 stroke, Air Cooled
Maximum Flow Rate	900 L/min

IMPORTANT

Please make certain that persons who are to use this equipment thoroughly read and understand these instructions and any additional instructions provided prior to operation.

NOTE

No refund or exchange once petrol is placed into the fuel tank.
Warranty registration must be complete within
30 days of purchase with proof of purchase.

2 YEAR WARRANTY.

NSW/ACT
TEL: (02) 9677 1555
FAX: (02) 9675 1155

QLD/PNG
TEL: (07) 3204 9166
FAX: (07) 3204 1224

VIC/TAS
TEL: (03) 8787 8288
FAX: (03) 8787 8266

WA
TEL: (08) 9302 4199
FAX: (08) 9303 2095

SA/NT
TEL: (08) 8241 7111
FAX: (08) 8241 7011

NZ
TEL: (64) 9 447 1007
FAX: (64) 9 447 1008

TABLE OF CONTENTS

1

SAFETY INSTRUCTION	1
CHARACTERISTICS AND USE	2
COMPONENT AND CONTROL LOCATIONS	3
PRE-OPERATION CHECK	4
1) Install the hose connector	4
2) Connect the suction hose	4
3) Connect the discharge hose	5
4) Check the engine oil level	5
5) Check the fuel level	6
6) Check the air cleaner element	7
7) Check that all nuts, bolts, and screws are tightened	7
8) Check the priming water	7
5. STARTING THE ENGINE	8
6. OPERATION	9
7. STOPPING THE ENGINE	10
8. ENVIRONMENTAL PROTECTION	10
9. MAINTENANCE	11
1) Change oil	13
2) Air cleaner service	13
3) Cleaning and replacing the fuel filter	14
10. TRANSPORTING/STORAGE	15
11. TROUBLESHOOTING	16
12. SPECIFICATION	16

IMPORTANT

Keep this user manual handy, so you can refer to it at any time. All information in this publication is based on the latest product information available at the time of approval for printing. This manual is considered a permanent part of the pump and should remain with the unit if resold. Your safety and the safety of others are very important.
We have provided important safety messages in this manual and on the machine.

DANGER

READ THIS OWNER'S MANUAL CAREFULLY.

Pay special attention to symbols and any instructions that follow:
Indicates serious injury or death will result if instructions are not followed.

WARNING

Indicates a strong possibility that serious injury or death could result if instructions are no fool allowed.

WARNING

Indicates a possibility that minor injury or an result if instructions are not followed.
Indicates that equipment or property damage can result if instructions are not followed.

NOTE:

If a problem would arise, or if you have any questions about your pump, consult your appliance dealer.

IMPORTANT

- The diesel driven diesel & water pump is designed to give safe and dependable service if operated according to instructions.
- Read and understand the User Manual before operating the pump.
  Failure to do so could result in personal injury or equipment damage.
- The muffler becomes very hot during operation and remains hot for a while after stopping the engine.
  Be careful not to touch the muffler while it is hot. Let the engine cool before storing the water indoors.
- The engine exhaust system will be heated during operation and remain hot immediately after stopping the engine.
  To prevent scalding, pay attention to the warning marks attached to the water pump.
- Diesel fuel is extremely flammable and explosive under certain conditions. Refuel in a well-ventilated area with the engine stopped. Do not smoke or allow flames or sparks in the refuelling area or where diesel fuel is stored.
  Do not overfill the tank. After refuelling, make sure the tank cap is closed properly and securely.
- Be careful not to spill fuel when refuelling. Spilled fuel and fuel vapor may ignite. If any fuel is spilled, make sure the area is dry before starting the engine.
- Exhaust gas contains poisonous carbon monoxide gas, exposure can cause loss of consciousness and may lead to death. Never run the engine in an enclosed or confined area.
- Always make a pre-operation inspection before you start the engine.
  You may prevent an accident or equipment damage.
- Do not allow children to operate the pump. Keep children and pets away from the area of operation.
- Know how to stop the pump quickly, and understand the operation of all the controls.
  Never permit anyone to operate the pump without the proper instructions.
- Place the pump on a firm, level surface rest the pump overturn.
- To prevent fire hazards and to provide adequate ventilation, keep the pump at least 1 metre away from building walls and other equipment during operation. Do not place flammable objects close to the pump.
- Dress properly. Do not wear loose clothing or jewellery. Contain long hair. Keep your hair, clothing, and gloves away from moving parts. Loose clothes, jewellery, and long hair can be caught in moving parts.
- Do not operate pump in explosive atmospheres, such as in the presence of flammable liquids, gases, or dust.
  The engine creates spark, which may ignite the dust or fumes.
- Do not overload the pump. Use the correct pump for your application.
  The correct pump will do the job better and safer at the rate for which it is designed.

CHARACTERISTICS AND USE

3

IMPORTANT

- The pump is a self-suction, single class eccentric pump. Powered by air-cooled, direct spray, 4-stroke, single cylinder diesel engine. The spare parts are high pressure and die-casting aluminium alloy and mechanical seals devices.

COMPONENT AND CONTROL LOCATIONS

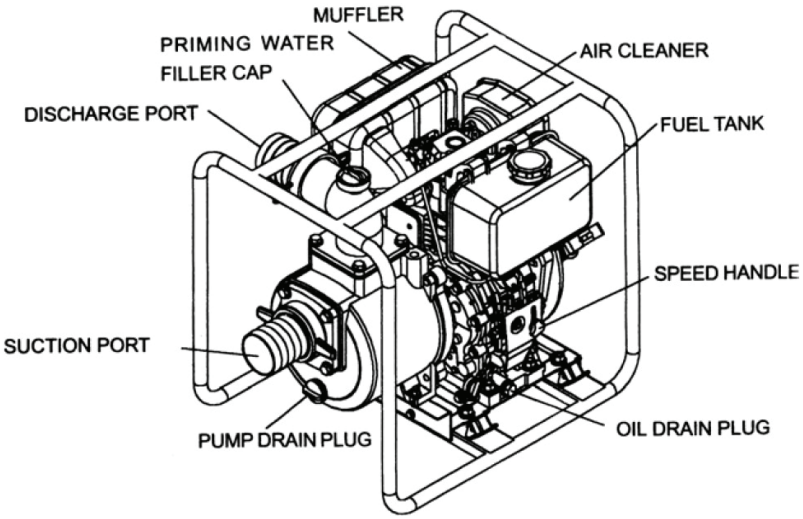

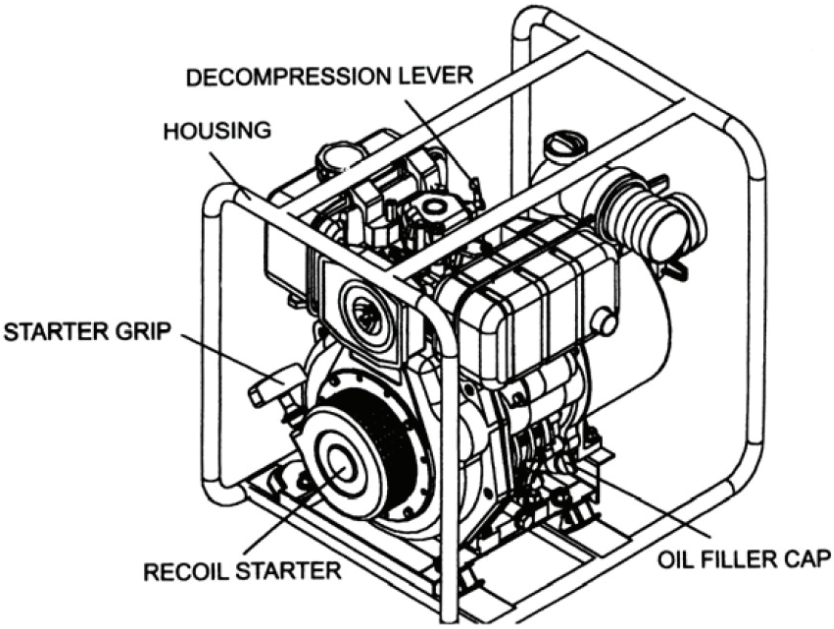

PRE-OPERATION CHECK

4

IMPORTANT

1) Install the hose connector.

Be sure to check that the packing is seated in its place and install the hose connector to the port the pump.

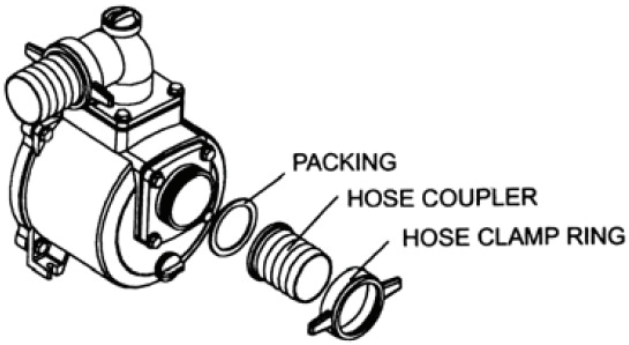

2) Connect the suction hose.

Use commercially available hose, hose connector and hose bands. The suction hose must be of reinforced, not collapsible construction. Suction hose length should not be longer than necessary, as pump performance is best when the pump is not far above the source of supply level. Self-priming time is also proportional to hose length.

A loose hose will reduce the pump performance and self-suction capacity. Before pumping water, attach the filter to the end of the hose to filter out foreign particles in the water, the presence of which may cause clogging and damage the machine. The strainer that is provided with the pump should be attached to the end of the suction hose with a band, as shown.

CAUTION

Always install the strainer on the end of the suction hose before pumping. The strainer will exclude debris that can cause clogging or impeller damage.

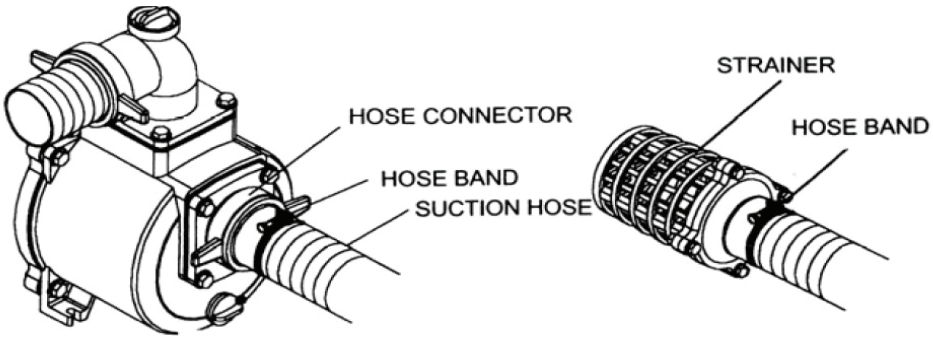

IMPORTANT

3) Connect the discharge hose.

Use a commercially available hose, hose connector and hose band. A short, large diameter hose is most efficient. Long or small diameter hose increases fluid friction and reduces pump output.

NOTE

Tighten the hose band securely to prevent the under high pressure.

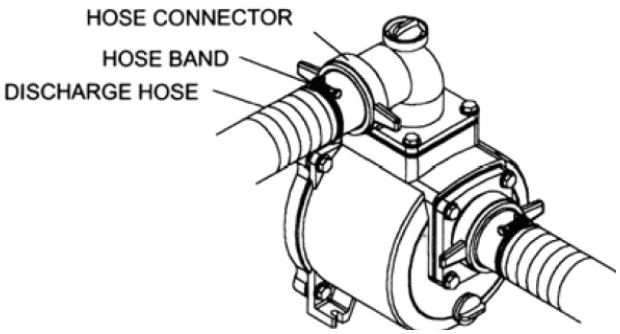

4) Check the engine oil level.

Check the engine oil level and replenish oil up to the neck if the pump is operated for more than 10 hours continuously.

CAUTION

• Engine oil is a major factor affecting engine service life. Detergent or vegetable oil is not recommended.

• Be sure to check the engine oil on a level surface with the engine stopped. Use 4-stroke automotive oil.

SAE 10W-30 is recommended for general use, all temperature use. If viscosity oil is used, select the appropriate viscosity for the average temperature in your area.

SAE VISCOSITY GRADES

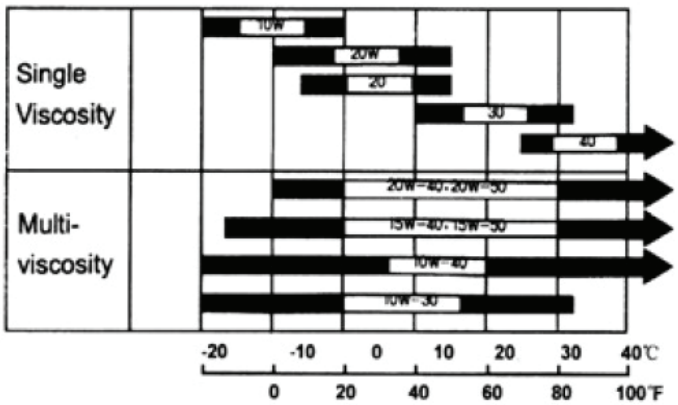

PRE-OPERATION CHECK

CAUTION

Using 2-stroke engine oil could shorten the engines service life. The recommended operating temperature range of this engine is 5ºC to 40ºC

1. Place the engine horizontally on a level surface.

2. Remove the oil filler cap and check the oil level.

3. If the level is low, fill to the edge of oil filler hole with the recommended oil

CAUTION

Running the engine with insufficient oil can cause serious engine damage.

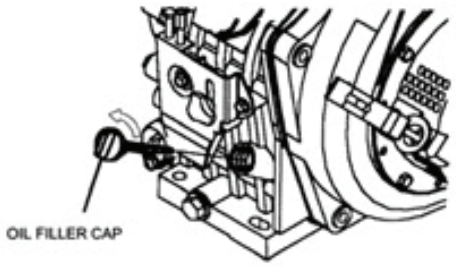

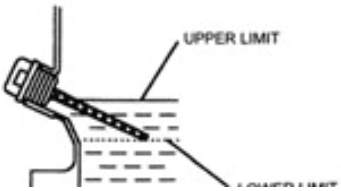

5) Check the fuel level.

Remove the fuel tank cap and check if the diesel fuel level is low. Use 0# diesel fuel for summer and 10# diesel fuel for winter.

- Diesel fuel oil is extremely flammable and is explosive under certain conditions.
- Refuel in a well-ventilated area with the engine stopped. Do not smoke or allow flames or sparks in the refuelling area or when diesel oil is stored.
- Do not overfill the tank (there should be no fuel above the upper limit mark). After refuelling, make sure the tank cap is closed properly and securely.
- Be careful not to spill fuel when refuelling. Spilled fuel or fuel vapour may ignite, if any fuel is spilled, make sure the area is dry before starting the engine.
- Avoid repeated or prolonged contact with skin or breathing of vapour.

KEEP OUT OF REACH OF CHILDREN.

- **Fuel tank capacity:**
- **DK80 - 3.5L**

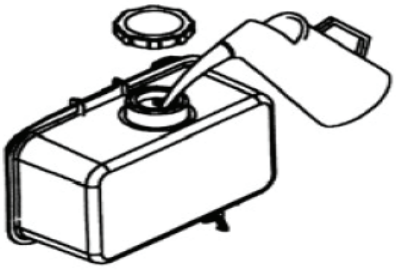

UPPER LIMIT MARK

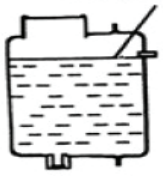

6) Check the air cleaner element.

Remove the air cleaner cover by loosening the wing nut on the cover.
Check the element to be sure it is clean and in good condition.
If the element is dirty, clean it.
Replace the element if it is damaged.
Reinstall the element and air cleaner cover.

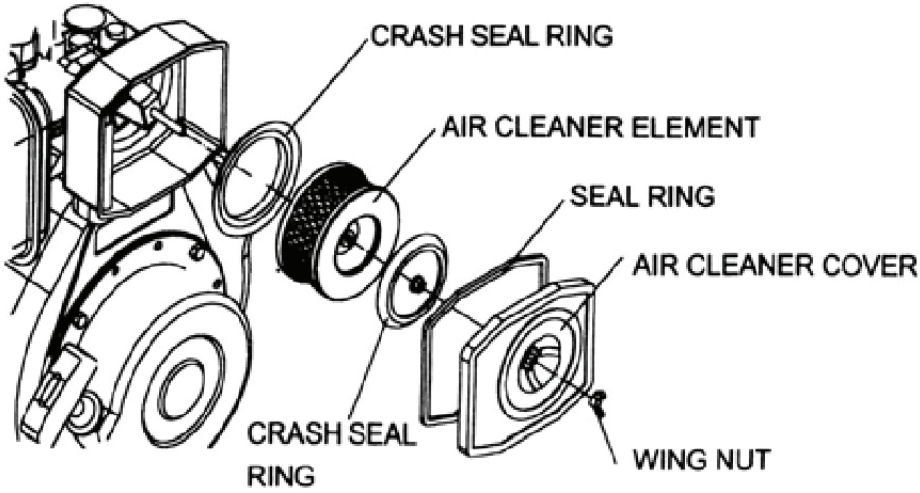

CAUTION

Never run the engine without the air cleaner result from contaminants, such as dust and dirt, getting into the engine.

7) Check that all nuts, bolts, and screws are tightened.

Tighten the bolts and nuts properly and securely, if necessary.

8) Check the priming water.

The pump chamber should be primed with full of water before operating.

- Never attempt to operate the pump without priming water, or the pump will overheat.
- Extended dry operation will destroy the pump seal. if the unit has been operated dry, stop the engine immediately and allow the pump to cool before priming..

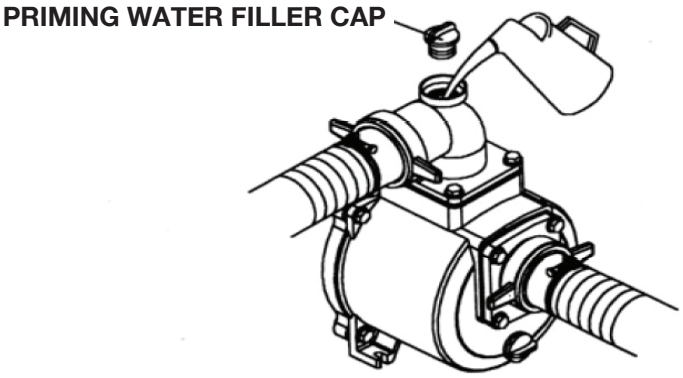

STARTING THE ENGINE

5

1) Open the fuel valve.

2) Set the engine governor lever at START position.

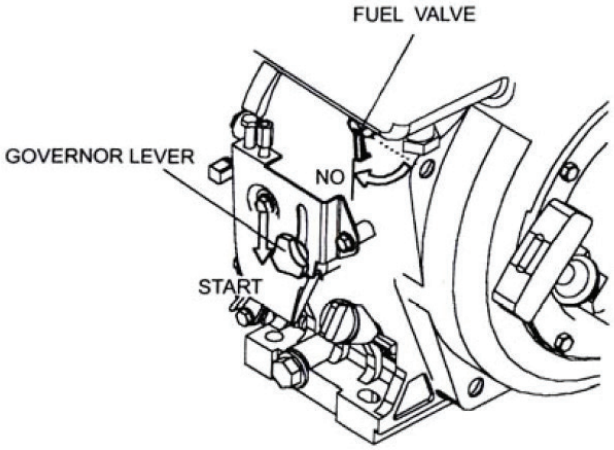

3) Pull the starter grip until you feel resistance, then return it back gently.

4) Move the decompression handle to the no compression position. After the diesel enginestarted, decompression handle will return back automatically.

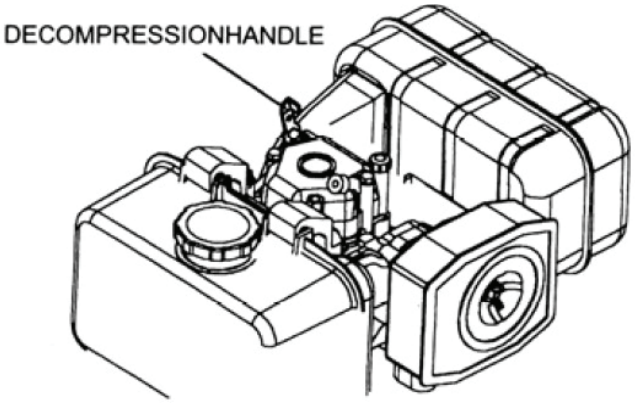

5) On the cold days, when it is difficult to start the diesel engine, screw off the refuelling bolt in the cylinder cover and fill in 2ml engine oil.

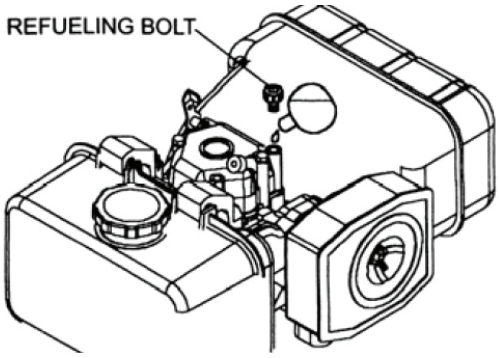

5

6) Hold the housing of the pump securely and pull the starter grip then pull briskly.

CAUTION

Do not allow the starter grip to engine snap back against the engine. Return it gently to prevent damaging the starter.

NOTE

Always pull the starter grip briskly. If not pulled briskly, it will result in failing to start the engine.

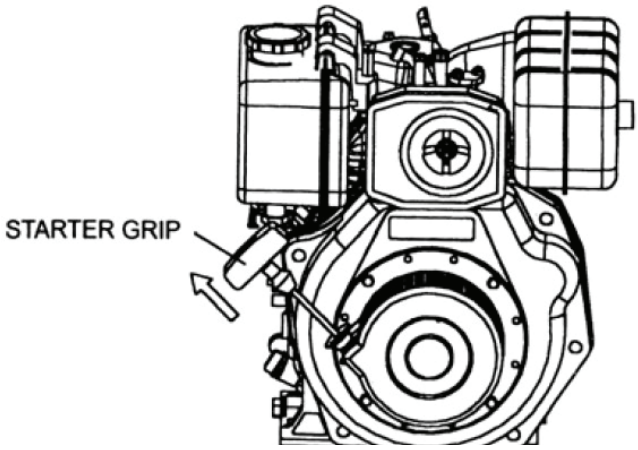

6 OPERATION

CAUTION

Never use the pump for muddy water, waste oil, wine etc. Do not pull the governor linkage to operate the engine forcibly outside its design parameters.

Turn the governor lever to the desired engine speed position.

Discharge flow is controlled by adjusting the engine speed.

Moving the governor lever to the FAST position will increase the flow, and the SLOW position will decrease pump flow.

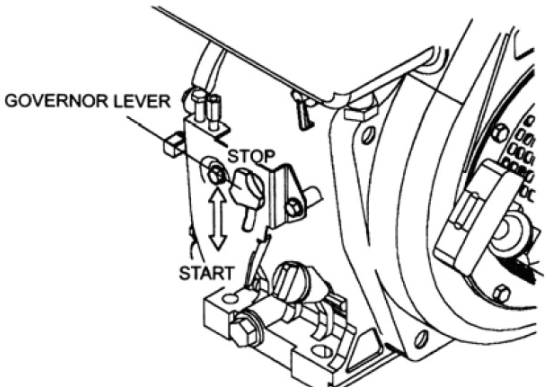

STOPPING THE ENGINE

7

1) First bring down the speed of the engine by using the speed governor. Let it run for 3 minutes at no load before stopping it.

2) Then move the governor lever to the STOP position.

3) Turn the fuel valve in the fuel tank to the OFF position.

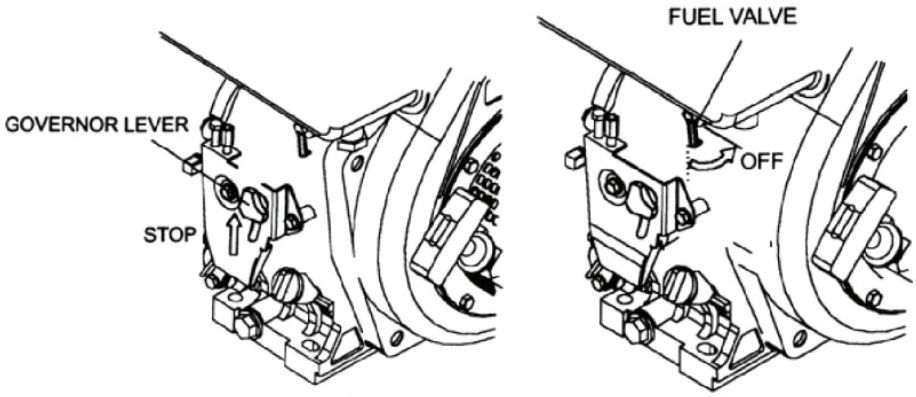

4) If the engine comes with an electric starter, turn the starting switch to the OFF position. After use, remove the pump drain plug, and the filler cap, flush the pump chamber with clean,fresh water. Allow the water to drain from the chamber, then reinstall the filler cap and drainplug.

8 ENVIRONMENTAL PROTECTION

PLEASE ARRANGE FOR THE PROPER DISPOSAL OF THE PACKAGING

The packaging material can be recycled.
Please do not place the packaging into the ordinary refuse bin fordisposal, but arrange for the proper recycling.

PLEASE ARRANGE FOR THE PROPER DISPOSAL OF THE OLD APPLIANCE

Old appliances contain valuable materials that can be recycled.
Please arrange for the proper recycling of old appliances.
Batteries, oil, and similar substances must not enter the environment.
Please dispose of your old appliances using appropriate collection systems.

MAINTENANCE

9.

Periodic inspection and adjustment of the pump are essential if high to be maintained. Regular maintenance will also help to extend ser service intervals and the kind of maintenance to be performed are described in the table below.

WARNING

• Shut off the engine before performing any maintenance.

• If the engine must be run, make su well-ventilated.

The exhaust contains poisonous carbon monoxide gas, exposure can cause loss of consciousness and may lead to death.

CAUTION

If the pump has been used with seawater, water immediately afterward to reduce corrosion or remove sediment.

Maintenance schedule

INTERVALS (hours) INEM	Before each use	First month or 20hrs	First year or 50hrs	First year or 100hrs	First year or 200hrs	First year or 500hrs	First year or 1000hrs
All bolts and nuts check	○						
Check and replenish oil	○						
Change lube oil		○(first)		○ (second)			
Clean oil filter		○					
Check for oil leakage	○						
Air cleaner element replacement					○		
Clean or replace fuel filter				○(first)		○(clean)	○ (replace)
Check fuel injection						○	
Check fuel injection pump						○	
Adjust valve clearance of intake and exhaust						○	
Check in take and Exhaust valves base							○
Replace piston ring							○

NOTE:

1) Service more frequently when used in dusty areas.

2) Change engine oil every 25 hours when used under heavy load or high ambient temperature.

MAINTENANCE

1) Change oil

Drain the oil while the engine is still warm to assure

1) Remove the oil filler cap and drain plug, to drain the oil.

2) Install the drain plug, and tighten it securely.

3) Refill with the recommended oil and check the oil level.

4) Install the oil filler cap.

Engine oil capacity: DK80 - 3:1L

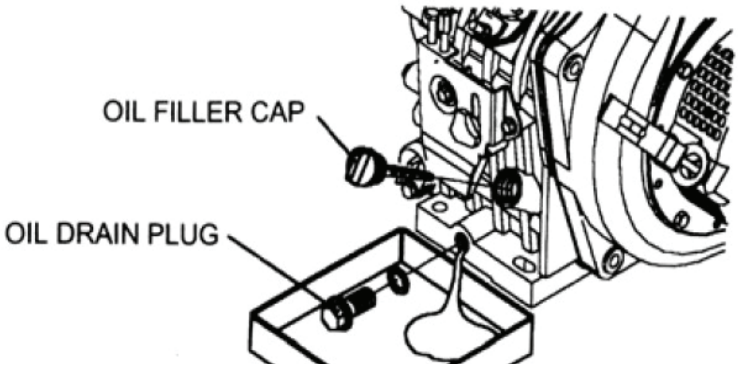

WARNING

Wash your hands with soap and water after handling used oil. The diesel fuel and engine oil are harmful for your health.
To change them must wear protective equipment.

CAUTION

Please dispose of used engine oil in a manner that is compatible with the environment.
We suggest you take it in a sealed container to your local service station.
Do not throw in the trash or pour it on the ground.

2) Air cleaner service

A dirty air cleaner element will restrict the air flow, hard starting,the exhaust of black smoke.
To prevent pump operating the pump resulting in malfunction service the loss of output and cleaner regularly.
Service more frequently when in extremely dusty areas.

WARNING

Do not use diesel fuel or low flash point are flammable and explosive under certain conditions.

CAUTION

Never run the pump without the air cleaner result from contaminants such as dust and dirt being drawn into the engine.

2) Air cleaner service

1) Remove the air cleaner cover by loosening the wing nut.

2) Wash the element in a non flammable or high flash point solvent and dry it thoroughly.

3) Soak the element in clean engine oil and squeeze out the excess oil.

4) Reinstall the air cleaner element.

5) Reinstall the air cleaner cover, then screw on the wing nut and tighten it securely.

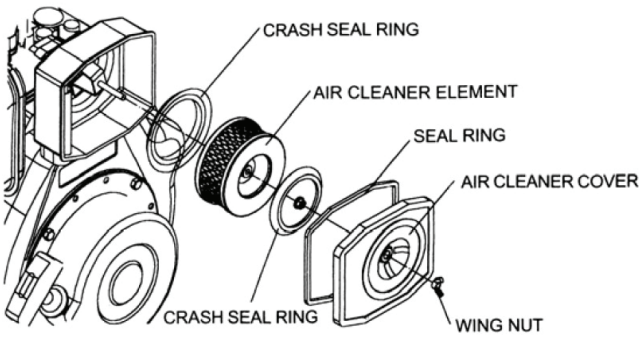

3) Cleaning and replacing the fuel filter.

Remove the fuel filter from the fuel tank, then wash or replace it.

Clean: every 6 months or 500 hours.

Replace: every year or 1000 hours.

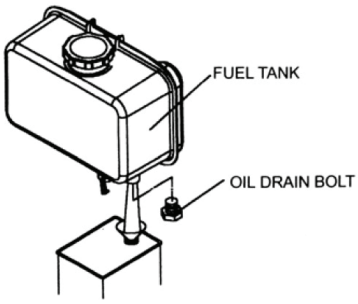

1) Drain the fuel from the fuel tank thoroughly.

2) Screw off two nuts in the fuel valve, remove the fuel filter from the fuel tank.
If the engine has been running, the muffler wil to cool before proceeding.

TRANSPORTING / STORAGE

10.

WARNING

• To avoid severe burns or fire hazards, let the engine cool before transporting the pump or storing it indoors.

• When transporting the pump, turn the fuel valve to the OFF position, keep the pump level and make sure the tank cap is installed securely. Spilled fuel or fuel vapour may ignite.

Before storing the pump for an extended period

1) Be sure the storage area is free of excessive humidity and dust.

2) Clean the pump interior

Sediment will settle in the pump if it has been used in muddy, containing heavy debris.

3) Drain the fuel

a. Drain the diesel oil in the fuel tank into the suitable container, tipping the pump slightly prevents the control parts to not be contaminated by the drained diesel oil.

b. Retighten the fuel valve again.

Pump clean water through the pump before shutting down, or impeller may be damaged when restarting.

After flushing, remove the pump drain plug, drain as much water as possible from the pump housing and reinstall the plug.

4) Replace the engine oil.

5) Clean the air cleaner.

6) Pull the starter grip until resistance is felt. This will close the valves so moisture cannot enter the engine cylinder, and protect the engine from dust and corrosion. Return the starter gently.

7) Cover the pump to keep out dust.

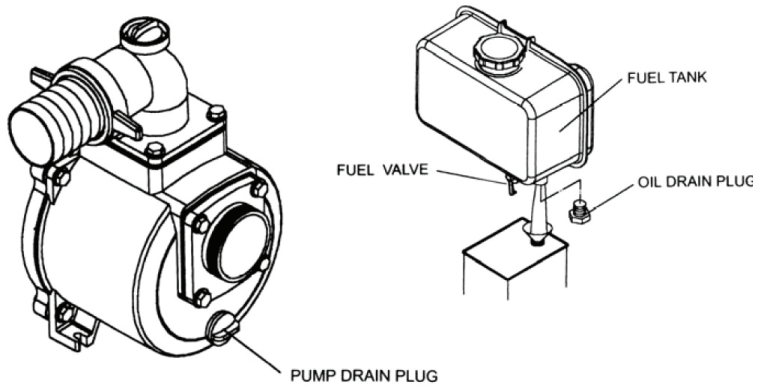

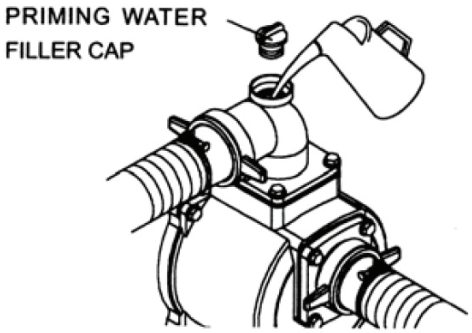

TROUBLESHOOTING

11.

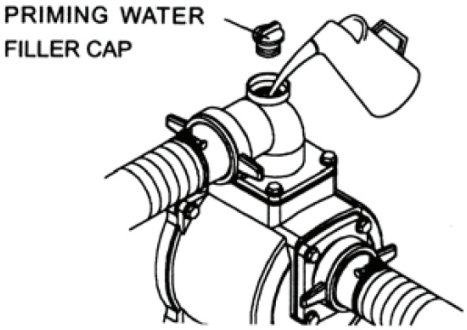

When the engine will not start:

1) Is the diesel oil used appropriate?

2) Is there enough oil in the engine?

3) Is the fuel valve ON?

4) Is there fuel in the fuel tank?

5) Is the injection timing correct? Adjust the thickness of the shim packs.

6) Is the atomization ofthe injection nozzle bad? Clean or replace the injection nozzle.
If any fuel is spilled, make sure the area is dry before starting the engine. Spilled fuel or fuel vapour may ignite

When the pump cannot pump the water:

1) Is the pump fully primed?

2) Is the strainer clogged?

3) Are the hose bands installed securely?

4) Are the hose damaged?

5) Is the suction head too high?

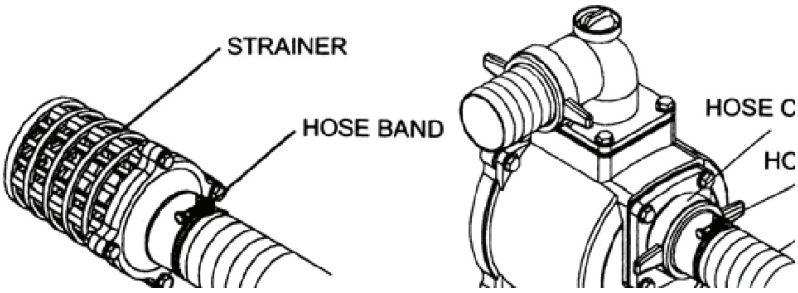

12 SPECIFICATIONS

Type	2in	3in	4in	6in	178F15H	178F20H	186F30H
Inlet outlet caliber(mm)	50(2")	80(3")	100(4")	150(6")	38(1.5")	50(2")	80(3")
Max flow(m^3/h)	22	36	64	145	20	30	40
Single-cylinder,4-stroke air-cooled diesel engine							
Pump life(m)	25	28	25	28	57	65	70
Max.Suction Head(m)	7	7	7	6	7	7	7
Weight	37	45	65	136	45	48	65
Displacement(cc)	211	296	406	498	296	296	406
Engine Type	170F	178F	186F	192F	178F	178F	186F
Rated output[kW(HP)]	2.5(3.4)	3.8(5.2)	6.5(9.0)	8.2(11)	3.8(5.2)	3.8(5.2)	6.5(9.0)
Rated Speed	3000	3000	3000	3000	3000	3000	3000
Dimension (L*W*H)(mm)	535*420*510	560*455*560	660*490*610	7855*575*805	560*455*560	560*455*560	660*490*610